Dept	Qty
DC	1
ED	1
IE	1
ISO	1
PD	1
R&D	1
SD	1
QA	1
QC	1
QE	1

REV.	DESCRIPTION	DRAWN	CHECKED	APPROVED
A	NEW RELEASE	WPY 06/30/25'		

Male

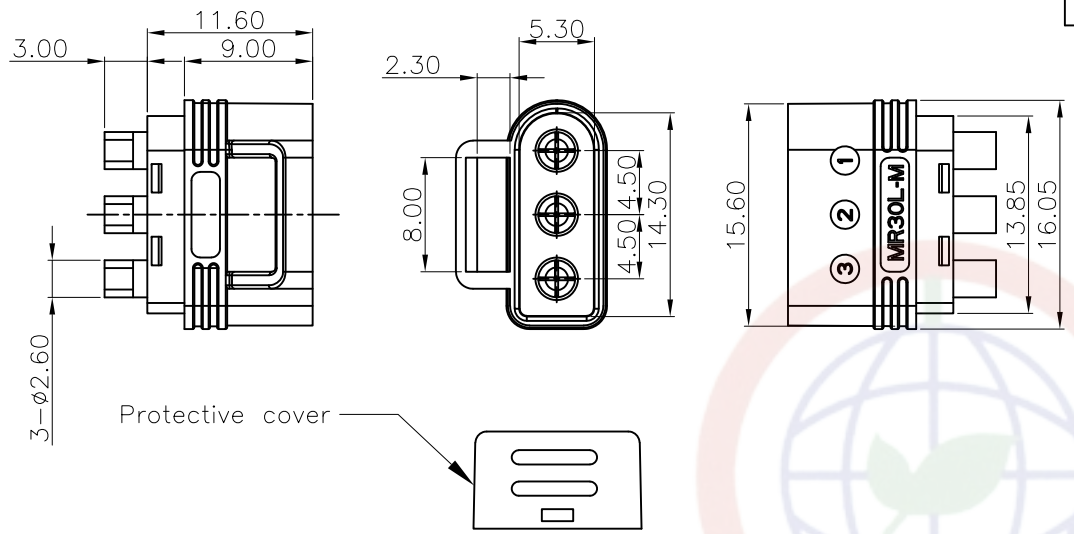

Notes:

1. Rated current: 20A
2. Voltage endurance: 500V DC
3. Contact resistance: 0.55mΩ
4. Insulation current: 2000MΩ
5. Instantaneous current: 40A
6. Environmental temperature: -20 ℃ -120 ℃
   Salt spray test:24H
7. Mechanical lifespan: 500~1000 times
8. Recommended wiring:18AWG
9. Insertion and extraction force: 1.2kg-4.5kg

Materials:

1. Insulation Material: PA6, UL94V-0
2. Metal material: Brass with gold plating

Product Number Code:

DS1220-05-X X X X

- Housing color: Y:Yellow
- Contact Plating 8:Full gold flash
- Connector type: M:Male F:Female A:Male+Female
- No. of Contacts 3:3

Female

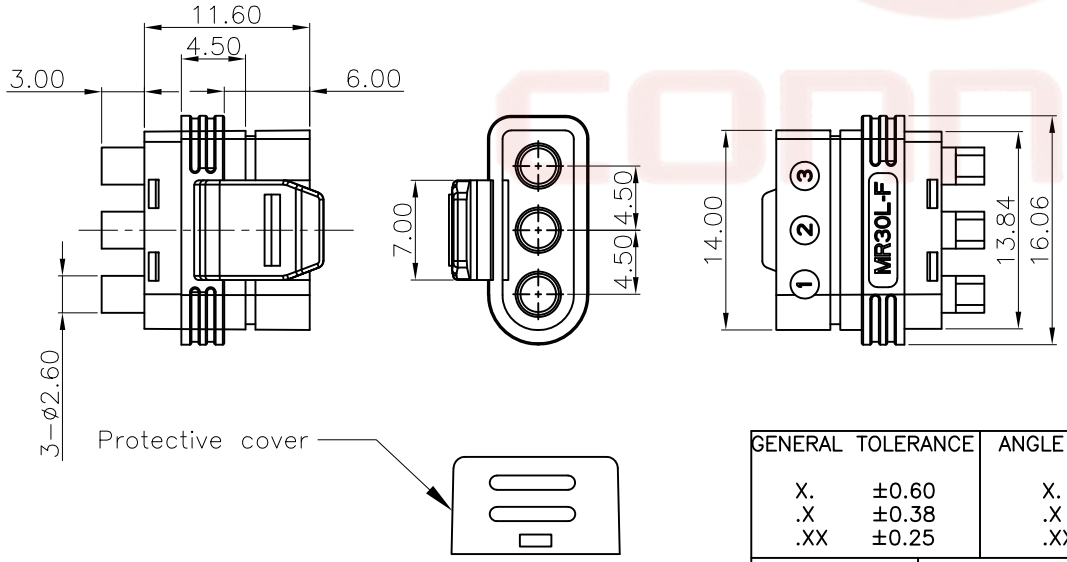

(Series Image-Reference Only)

GENERAL TOLERANCE		ANGLE TOLERANCE	
X.	±0.60	X.	±5°
.X	±0.38	.X	±3°
.XX	±0.25	.XX	±2°

DRAWING TYPE	CUSTOMER		
SCALE	1:1	SHEET	1 OF 1
DRAWING NO.	C-DS1220-05-XXXX-A		

PROJECTION		TITLE	3Pin 15A Sheathed power connector Solder Type
UNITS	mm		
SHEET SIZE	A4	SERIES	DS1220-05 SERIES

晨翔电子有限公司

CONNFLY CONNFLY ELECTRONIC CO. LTD

The information provided herein is from CONNFLY Electronic Co., Ltd. and is confidential. Any disclosure to a party other than the recipient is prohibited. The intellectual properties and its rights contained herein, including but limited to, trademarks, patents, copyrights, trade secrets, and technical know-how are owned exclusively by CONNFLY or its affiliates. Unauthorized use or modification is strictly prohibited without prior written consent from CONNFLY. All intellectual properties provided herein are for reference purposes only and does not constitute authorization of its use in any format or manner. CONNFLY may enforce its intellectual property rights at its own discretion; failures or delays to exercise such rights does not constitute a waiver of such rights.